MOC8101X,MOC8102X,MOC8103X, MOC8104X,MOC8105X MOC8101, MOC8102, MOC8103,MOC8104,MOC8105

ISOCOM COMPONENTS

NON-BASE LEAD OPTICALLY COUPLED ISOLATOR PHOTOTRANSISTOR OUTPUT

ROHS COMPLIANT

APPROVALS

- UL recognised, File No. E91231
  Package Code " GG "

'X' SPECIFICATION APPROVALS

- VDE 0884 in 3 available lead form : -
  - STD
  G form
  - SMD approved to CECC 00802
- Certified to EN60950 by :-
  Nemko - Certificate No. P01102464

DESCRIPTION

The MOC8101, MOC8102, MOC8103, MOC8104, MOC8105 series of optically coupled isolators consist of infrared light emitting diode and NPN silicon photo transistor in a standard 6 pin dual in line plastic package with the base pin unconnected.

FEATURES

- Options :-
  10mm lead spread - add G after part no.
  Surface mount - add SM after part no.
  Tape&reel - add SMT&R after part no.
- High Isolation Voltage ($5.3kV_{RMS}$, $7.5kV_{PK}$)
- Base pin unconnected for improved noise immunity in high EMI environment

APPLICATIONS

- DC motor controllers
- Industrial systems controllers
- Signal transmission between systems of different potentials and impedances

OPTION SM
SURFACE MOUNT

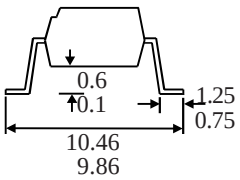

OPTION G

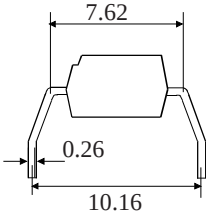

Dimensions in mm

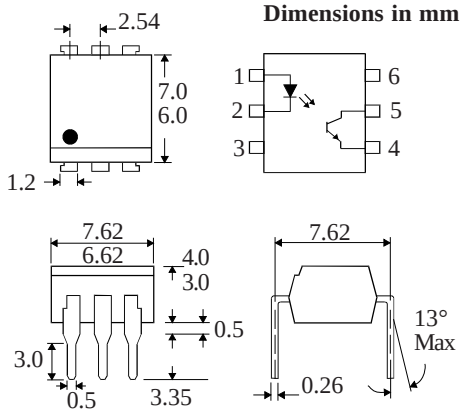

ABSOLUTE MAXIMUM RATINGS
(25°C unless otherwise specified)

Storage Temperature	-55°C to + 150°C
Operating Temperature	-55°C to + 100°C
Lead Soldering Temperature (1/16 inch (1.6mm) from case for 10 secs)	260°C

INPUT DIODE

Forward Current	60mA
Reverse Voltage	6V
Power Dissipation	105mW

OUTPUT TRANSISTOR

Collector-emitter Voltage BV_{CEO}	30V
Emitter-collector Voltage BV_{ECO}	6V
Collector Current	50mA
Power Dissipation	160mW

POWER DISSIPATION

Total Power Dissipation (derate linearly 2.67mW/°C above 25°C)	200mW

ISOCOM COMPONENTS 2004 LTD
Unit 25B, Park View Road West,
Park View Industrial Estate, Brenda Road
Hartlepool, Cleveland, TS25 1UD
Tel: (01429) 863609 Fax: (01429) 863581

ELECTRICAL CHARACTERISTICS (T_A= 25°C Unless otherwise noted)

PARAMETER		MIN	TYP	MAX	UNITS	TEST CONDITION
Input	Forward Voltage (V_F)	1.0	1.15	1.5	V	I_F = 10mA
	Reverse Current (I_R)			10	µA	V_R=6V
Output	Collector-emitter Breakdown (BV_{CEO}) (Note 2)	30			V	I_C = 1mA
	Emitter-collector Breakdown (BV_{ECO})	6			V	I_E = 100µA
	Collector-emitter Dark Current (I_{CEO})			50	nA	V_{CE} = 10V
Coupled	Output Collector Current (I_C) (Note 3)					
	MOC8101	5.0		8.0	mA	10mA I_F, 10V V_{CE}
	MOC8102	7.3		11.7	mA	10mA I_F, 10V V_{CE}
	MOC8103	10.8		17.3	mA	10mA I_F, 10V V_{CE}
	MOC8104	16		25.6	mA	10mA I_F, 10V V_{CE}
	MOC8105	6.5		13.3	mA	10mA I_F, 10V V_{CE}
	Collector-emitter Saturation Voltage $V_{CE(SAT)}$		0.15	0.4	V	5mA I_F, 0.5mA I_C
	Input to Output Isolation Voltage V_{ISO}	5300			V_{RMS}	See note 1
		7500			V_{PK}	See note 1
	Input-output Isolation Resistance R_{ISO}	$5x10^{10}$			Ω	V_{IO} = 500V (note 1)
	Response Time (Rise), tr		2		µs	V_{CC} = 5V , I_F = 10mA
	Response Time (Fall), tf		2		µs	R_L = 75Ω, (FIG 1)

Note 1 Measured with input leads shorted together and output leads shorted together.
Note 2 Special Selections are available on request. Please consult the factory.
Note 3 Production testing - limits verified with pulse test

FIGURE1

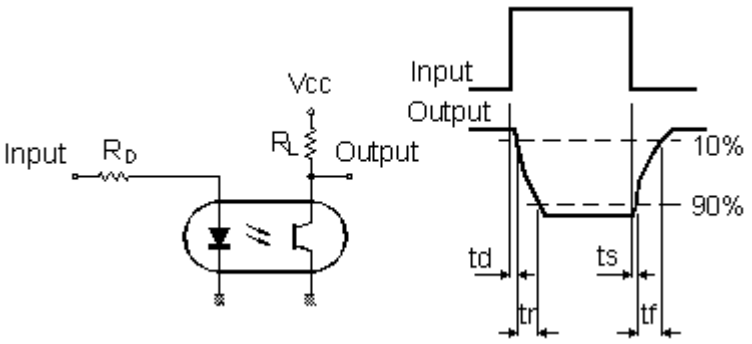

Collector Power Dissipation vs. Ambient Temperature

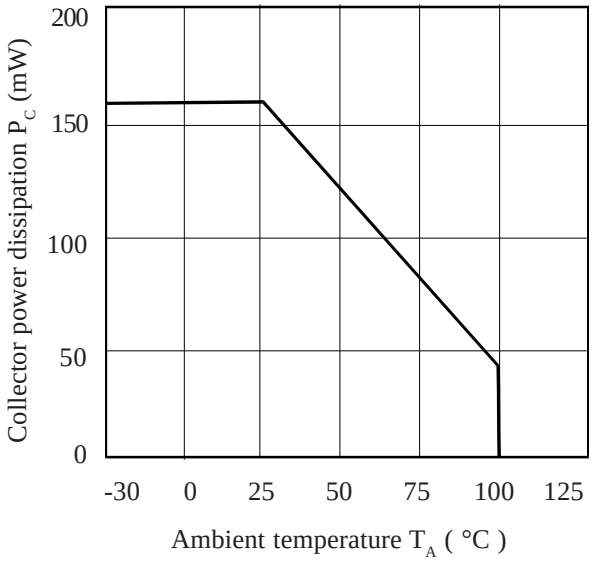

Collector Current vs. Collector-emitter Voltage

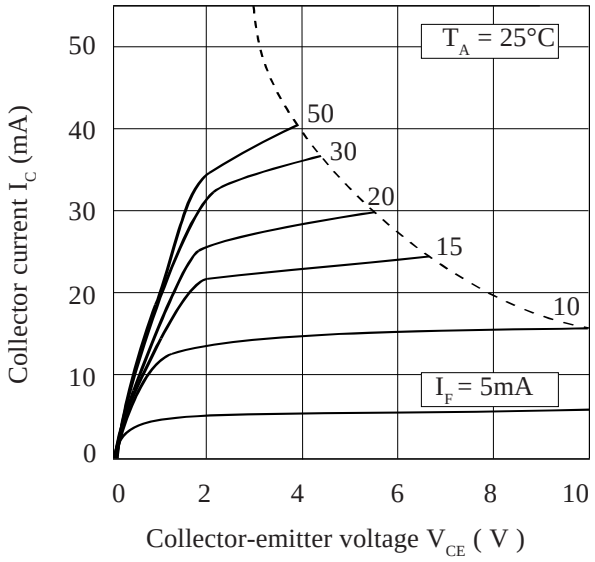

Forward Current vs. Ambient Temperature

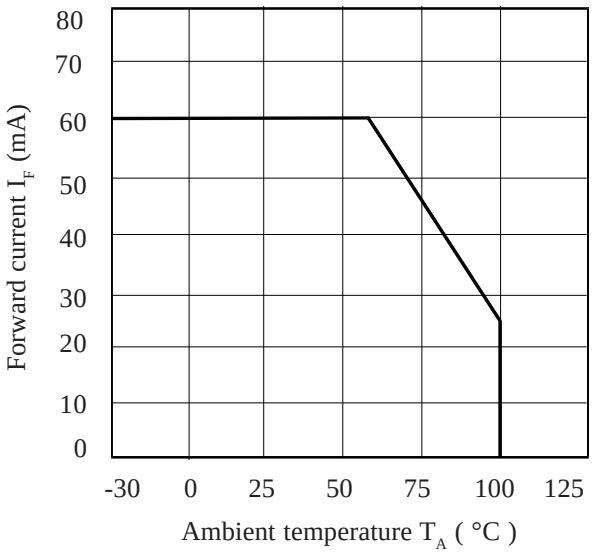

Current Transfer Ratio vs. Forward Current

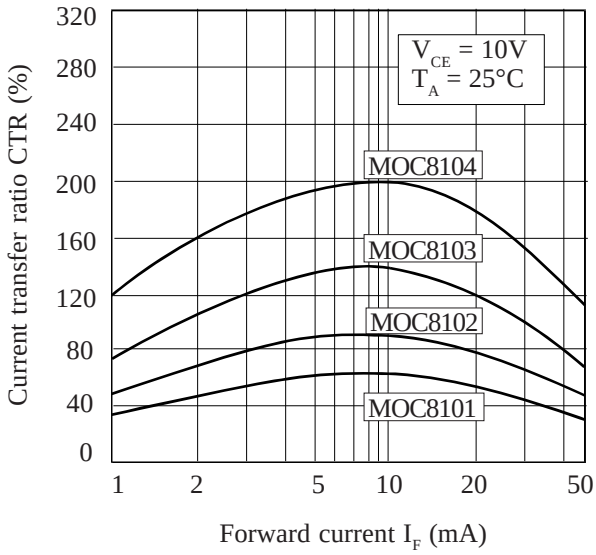

Relative Current Transfer Ratio vs. Ambient Temperature

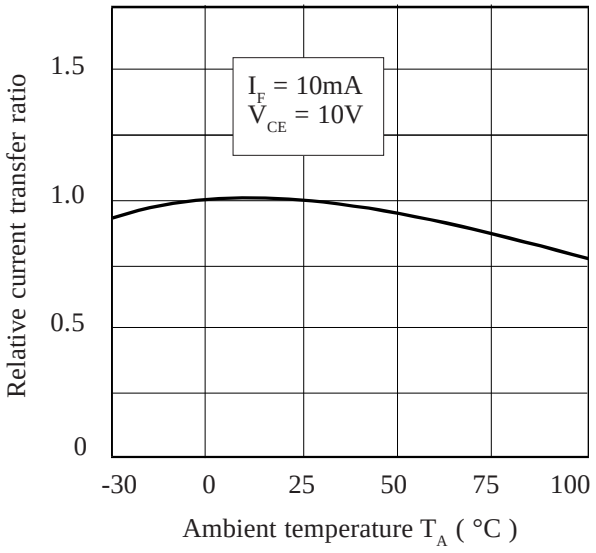
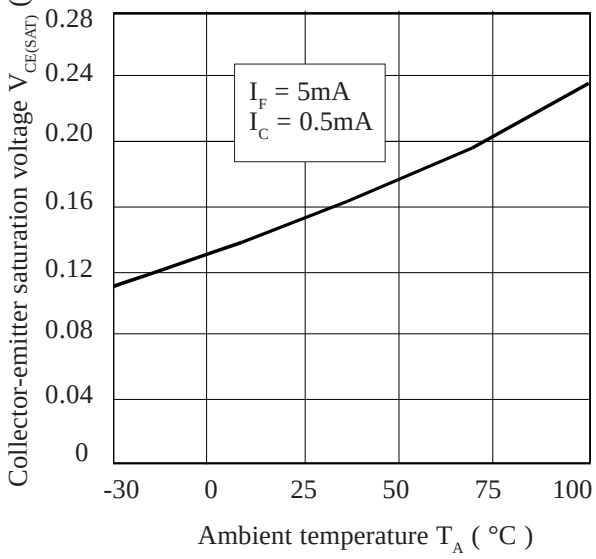
Collector-emitter Saturation Voltage vs. Ambient Temperature